

Ref: 2025

3 pcs full bore ball valve

Features

1. 3-part full-bore ball valve
2. Threaded ends in accordance with ISO 7-1 (EN 10226-1).
3. Steel construction using 1.4408 (CF8M) stainless steel.
4. PTFE seats + 15% glass fibre.
(for other materials, please enquire)
5. FKM (Viton) O'ring on the stem.
6. PTFE + 15% graphite shaft gaskets.
7. Locking system.
8. Direct actuator mounting to ISO 5211.
9. Non-ejectable shaft
10. Maximum working pressure 63 bar
11. Working temperature: –25 °C to +180 °C.



Genebre S.A. Edificio Genebre. Avda. Joan Carles I, 46-48. 08908 L'Hospitalet de Llobregat.
Barcelona (Spain). Tel.: +34 93 298 80 00/01. e-mail: genebre@genebre.es. www.genebre.es

No.	Designation	Material	Surface Finish	Spare part code
1	Body	Steel Inox 1.4408	Shot blasting	------
2	Cap	Inox steel 1.4408	Shot blasting	------
3*	Ball	Inox steel 1.4408	Polished	2907 / 2904 (4")
4*	Main section	Inox steel. AISI 316	------	2905
5*	Ball seat	PTFE + 15% F.V.	------	2820
6*	Gasket	PTFE + graphite	------	2820
7*	Washer	PTFE + graphite	------	2820
8*	O'ring	FKM	------	2820
9*	Stem packing	PTFE	------	2820
10	Press Ring	Stainless steel. AISI 304	------	------
11	Spring washer	Inox steel. AISI 301	------	------
12	Nut	Stainless steel. AISI 304	------	------
13	Washer	Inox steel. AISI 304	------	------
14	Stopper	Inox steel. AISI 304	------	------
15	Screw	Inox steel. AISI 304	------	------
16	Nut	Inox steel. AISI 304	------	------
17	Grover washer	Inox steel. AISI 304	------	------
18	Handle	Stainless steel. AISI 304	------	------
19	Handle sleeve	Vinyl	------	------
20	Lock washer	Stainless steel. AISI 304	------	------

* Spare parts available

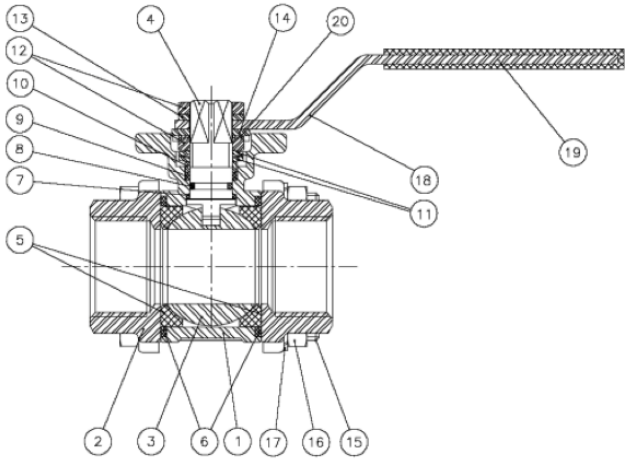

Genebre S.A. Edificio Genebre. Avda. Joan Carles I, 46-48. 08908 L'Hospitalet de Llobregat.
Barcelona (Spain). Tel.: +34 93 298 80 00/01. e-mail: genebre@genebre.es. www.genebre.es

Available only in sizes from 2 ½" to 4"

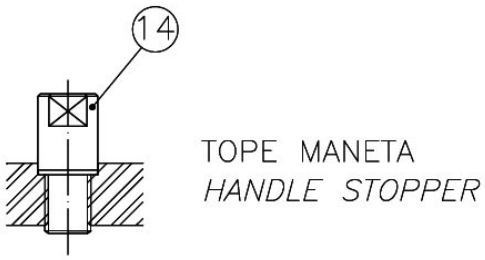

Detail of the shaft area

Lock washer: Prevents the nut on the shaft from coming loose during high operating cycles.
Spring washer: Spring washers provide a constant charge on the clamping mechanism, ensuring a secure seal under varying operating conditions.

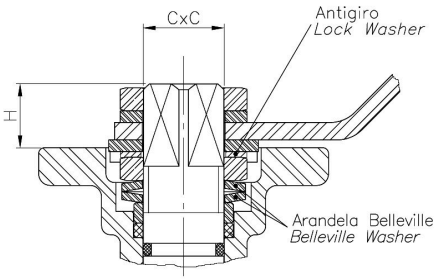

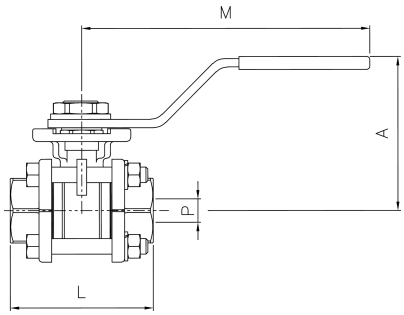

GENERAL DIMENSIONS

Ref.	Dimension	Dimensions (mm)				Weight (kg)
		P	L	A	M	
2025 02	1/4"	11	47,6	60	112	0.391
2025 03	3/8"	12,7	47,6	60	112	0.373
2025 04	1/2"	15	56	60	112	0.428
2025 05	3/4"	20	73	70	138	0.827
2025 06	1"	25	82	70	138	1.027
2025 07	1 1/4"	32	91	88	160	1.855
2025 08	1 1/2"	40	104	94	205	2.513
2025 09	2"	50	120	100	205	3.573
2025 10	2 1/2"	65	155	150	325	8.856
2025 11	3"	80	182	165	325	12.838
2025 12	4"	100	220	175	325	19.746

Genebre S.A. Edificio Genebre. Avda. Joan Carles I, 46-48. 08908 L'Hospitalet de Llobregat.
Barcelona (Spain). Tel.: +34 93 298 80 00/01. e-mail: genebre@genebre.es. www.genebre.es

Ref.	Size	PN	Dimensions (mm)		
			H	C x C	ISO 5211
2025 02	1/4"	63	10	9 x 9	F-03
2025 03	3/8"	63	10	9 x 9	F-03
2025 04	1/2"	63	11	9 x 9	F-03/F-04
2025 05	3/4"	63	11	11 x 11	F-04/F-05
2025 06	1"	63	11	11 x 11	F-04/F-05
2025 07	1 ¼"	63	15	14 x 14	F-05/F-07
2025 08	1 ½"	63	15	14 x 14	F-05/F-07
2025 09	2"	63	15	14 x 14	F-05/F-07
2025 10	2 ½"	63	19	17 x 17	F-07/F-10
2025 11	3"	63	19	17 x 17	F-07/F-10
2025 12	4"	63	19	17 x 17	F-07/F-10

PRESSURE-TEMPERATURE CURVE

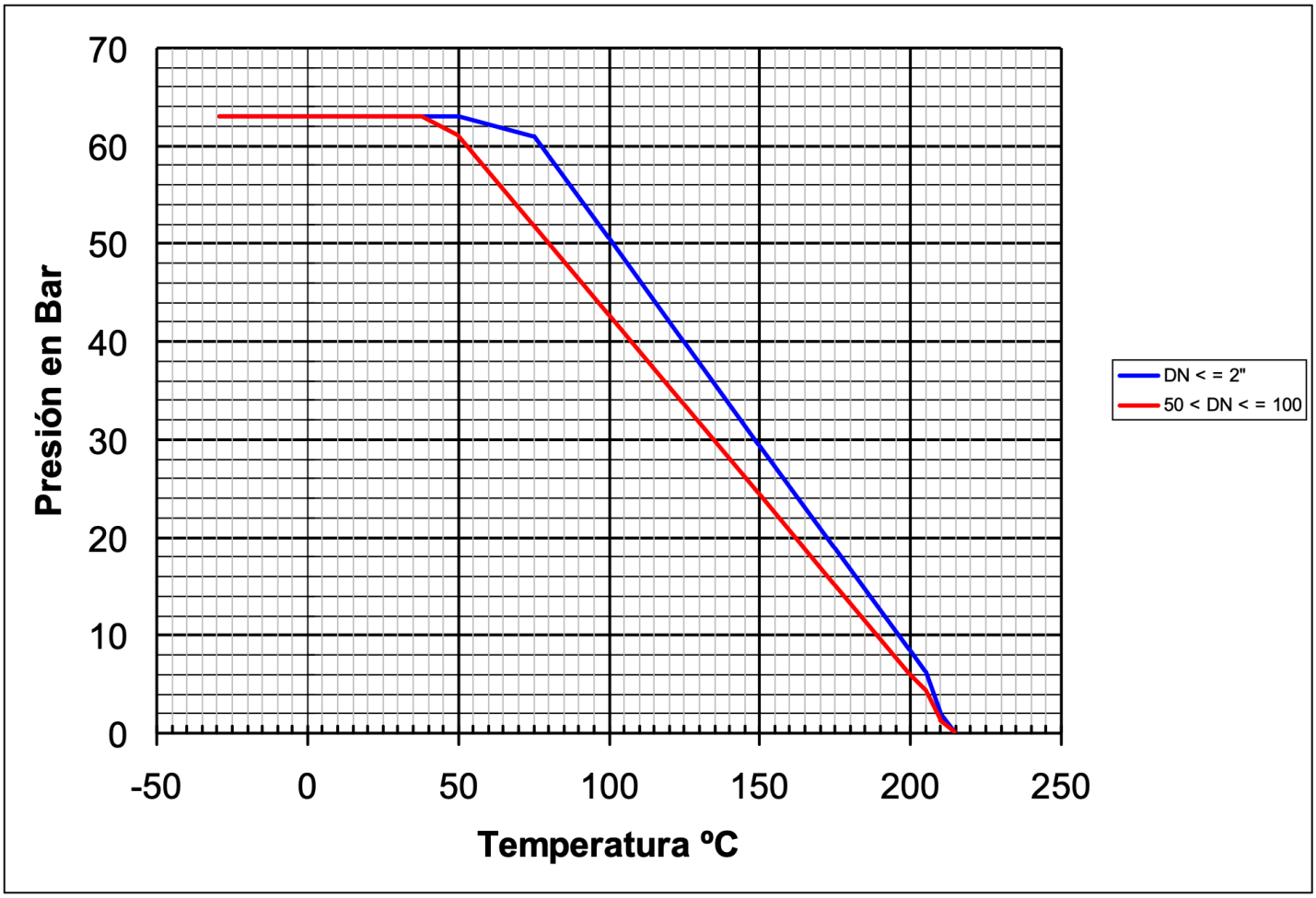

Genebre S.A. Edificio Genebre. Avda. Joan Carles I, 46-48. 08908 L'Hospitalet de Llobregat.
Barcelona (Spain). Tel.: +34 93 298 80 00/01. e-mail: genebre@genebre.es. www.genebre.es

Kv values

1/4"	3/8"	1/2"	3/4"	1"	1 1/4"	1 1/2"	2"	2 1/2"	3"	4"
6	10	24	43	83	130	205	340	520	1100	1820

Kv = The number of cubic metres per hour (m^3/h) that will pass through the valve, generating a pressure drop of 1 bar.

Pressure drop diagram

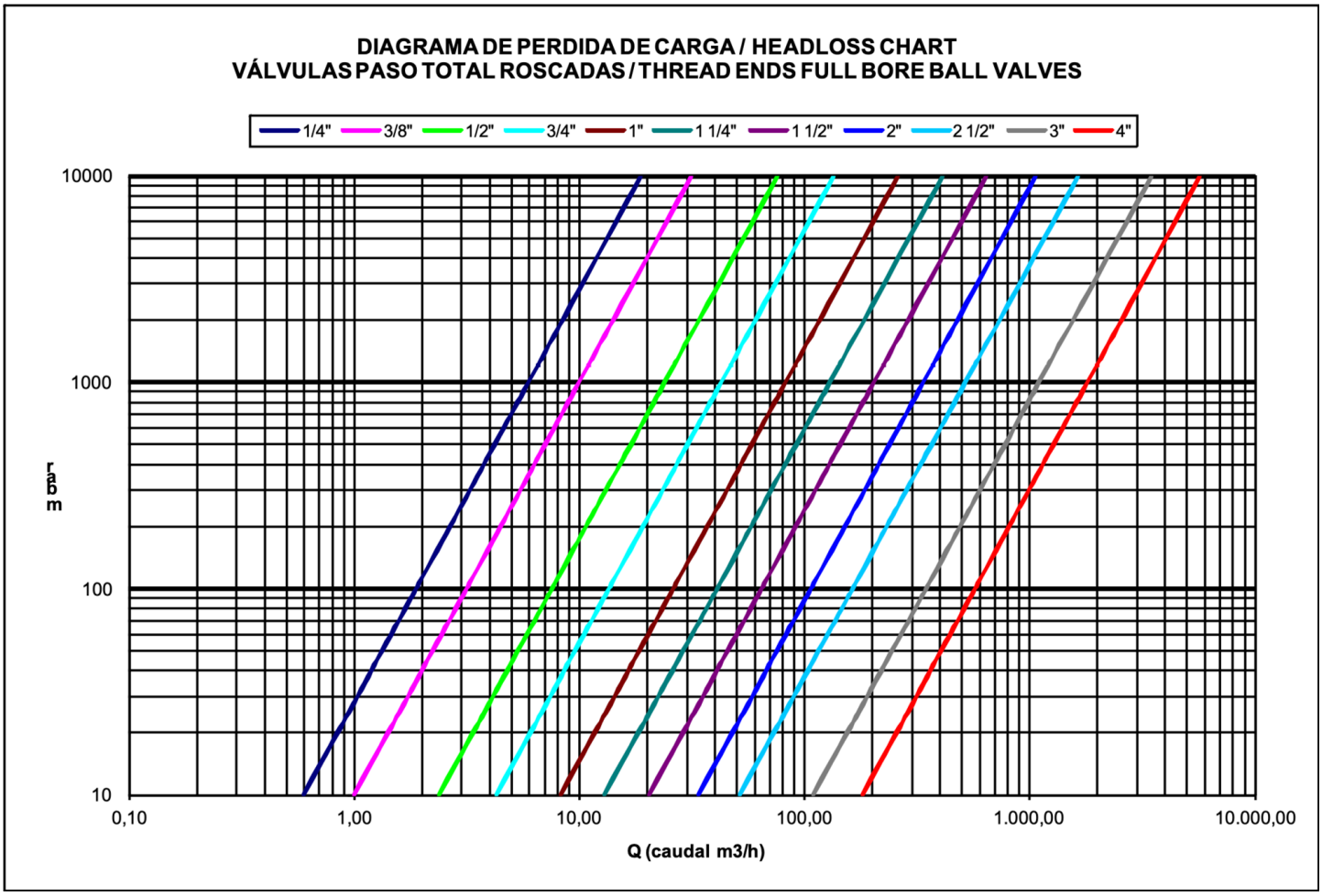

Genebre S.A. Edificio Genebre. Avda. Joan Carles I, 46-48. 08908 L'Hospitalet de Llobregat.
Barcelona (Spain). Tel.: +34 93 298 80 00/01. e-mail: genebre@genebre.es. www.genebre.es