Ref: 69134 34 41 66

Medium height single lever wash-basin mixer Black Kloe

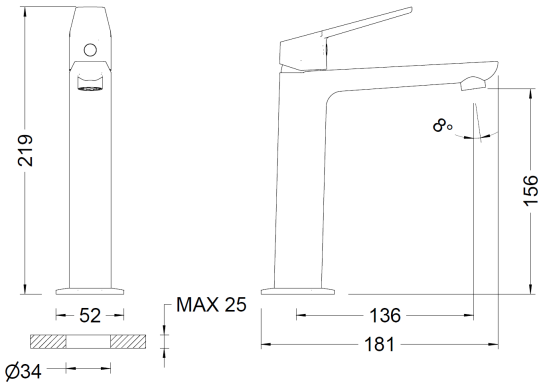

ATTESTATION DE CONFORMITÉ SANITAIRE ACS

ANTICAL ANTI-LIME

ECO

Genebre S.A. Edificio Genebre. Avda. Joan Carles I, 46-48. 08908 L'Hospitalet de Llobregat.
Barcelona (Spain). Tel.: +34 93 298 80 00/01. e-mail: genebre@genebre.es. www.genebre.es

TAPS COLLECTION

69134 34 41 66

Description

Medium-height single-lever basin mixer for countertop installation, in a matt black finish.
It features a taller body, suitable for countertop washbasins.
Fitted with a dynamic water-saving device, which reduces water and electricity consumption by limiting the maximum flow rate to 5 l/min.
Includes all fixing components and is also supplied with easy-to-install connection hoses.
Product manufactured in accordance with the UNE 19703 standard.

Features

1. Body made from brass in accordance with UNE-EN 1982.
2. Handle made from Zamak.
3. Matt black finish.
4. Ceramic cartridge, Ø25.
5. M16.5x1 anti-limescale, vandal-proof aerator with a 5-litre dynamic economiser.
6. Supplied with:
   - 50 cm hoses, 8x1 H 3/8" DN6.
   - U-bolt fixing assembly for threaded pipe.
7. Maximum temperature: 80 °C.
8. Recommended maximum temperature: 65 °C.
9. Maximum pressure: 10 bar.
10. Minimum pressure: 0.5 bar.
11. Recommended pressure: 1–3 bar.

Genebre S.A. Edificio Genebre. Avda. Joan Carles I, 46-48. 08908 L'Hospitalet de Llobregat.
Barcelona (Spain). Tel.: +34 93 298 80 00/01. e-mail: genebre@genebre.es. www.genebre.es

Flow rate

Pressure (bar)	Pressure (psi)	Air Flow Rate (l/min)
0.5	7.3	2.7
1.0	14.5	3.8
1.5	21.8	4.5
2.0	29.0	4.9
2.5	36.3	5.0
3.0	43.5	5.0
3.5	50.8	5.0
4.0	58.0	5.0
4.5	65.3	5.0
5.0	72.5	4.9
5.5	79.8	4.8

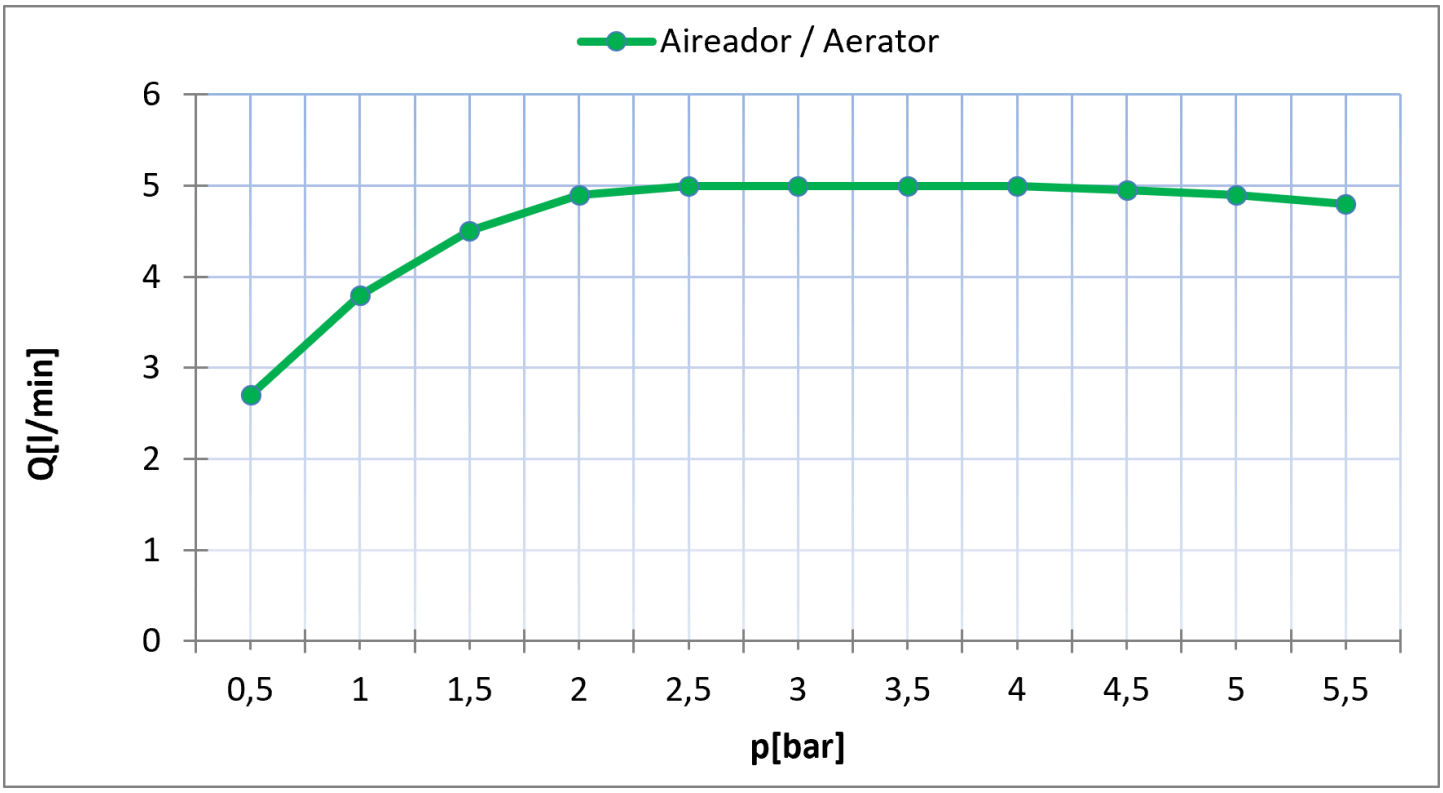

Genebre S.A. Edificio Genebre. Avda. Joan Carles I, 46-48. 08908 L'Hospitalet de Llobregat.
Barcelona (Spain). Tel.: +34 93 298 80 00/01. e-mail: genebre@genebre.es. www.genebre.es

SPARE PARTS

Nº	CÓDIGO	DESCRIPCIÓN
1	100001 34 41	Kloe lever Ø25
2	9908 0467	Free flow D25 ceramic cartridge upper gasket
3	100025 41	M16,5x1 Antivandal aerator 5 liters
4	9908 0468	M28 fixation set
5	100014	8x1 - F 3/8" 50 cm DN6 connection set

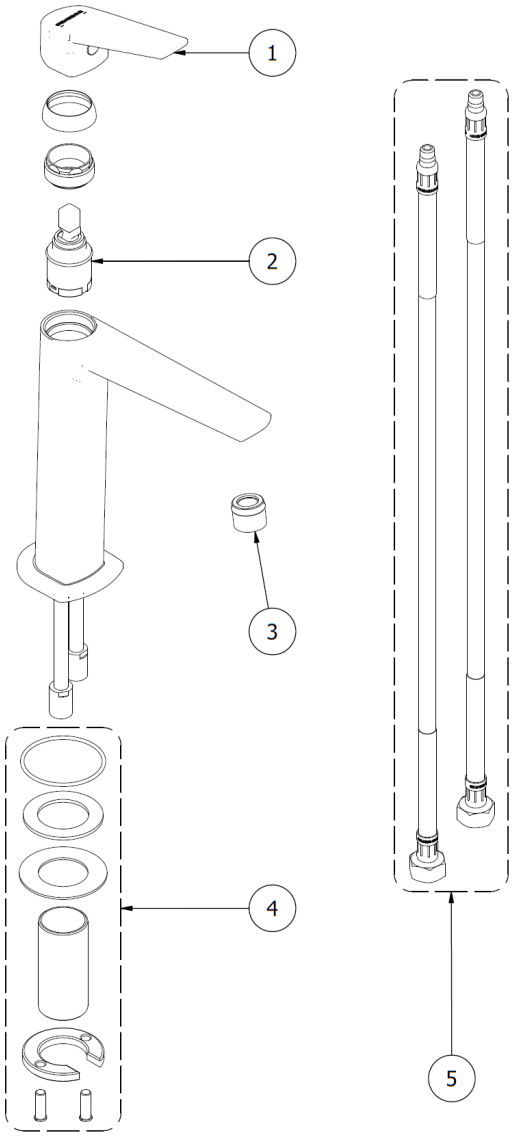

Genebre S.A. Edificio Genebre. Avda. Joan Carles I, 46-48. 08908 L'Hospitalet de Llobregat.
Barcelona (Spain). Tel.: +34 93 298 80 00/01. e-mail: genebre@genebre.es. www.genebre.es

SAFETY WARNINGS

Intended use of the product

The product must be used exclusively for the supply, conveyance, regulation, mixing or discharge of drinking water or sanitary water, in accordance with the intended use specified by **GENEBRE S.A.**.

Do not use the product with other liquids, chemicals, corrosive fluids or products that may compromise its safety, operation, durability or hygienic conditions.

The product must only be used in installations compatible with its technical specifications and within the conditions of use specified by **GENEBRE S.A.** in the relevant documentation.

Installation

Installation must be carried out in accordance with the installation instructions provided by **GENEBRE S.A.**, as well as the applicable regulations in each case.

Before installation, ensure that the pipework is clean and free from construction debris, sand, metal shavings, rust, sludge or other residues that may affect the product's correct operation.

The installation must be properly flushed and rinsed before the product is put into service, in order to remove any particles or suspended solids that may be present in the circuit.

During installation, use suitable tools and take care not to damage the visible surfaces, threads, seals, connections or internal components of the product.

Do not overtighten. Inadequate tightening may cause deformation, damage to connections, malfunctions or water leaks.

Before installing, handling, repairing or dismantling the product, close the relevant shut-off valve and release the pressure from the water circuit.

Filtration and water quality

Sand, rust, scale, sludge or other suspended solids must be prevented from entering the system, as they may cause blockages, reduced flow, damage to internal components, leaks or incorrect operation of the product.

Where the conditions of the installation or the supply network so require, a suitable mechanical filtration system, correctly sized and maintained, must be installed in accordance with the applicable regulations.

As a technical reference, mechanical filters for indoor drinking water installations are regulated by standard **EN 13443-1**, with a filtration rating of between **80 µm and 150 µm**.

It is not recommended to use the product in systems with a significant presence of sand, sludge, oxides, scale or other suspended solids, unless the system is fitted with a suitable and properly maintained filtration system.

Operating conditions

The product must be used within the pressure and temperature ranges specified by **GENEBRE S.A.** in the relevant technical documentation.

Use outside these parameters may cause damage, leaks, a reduction in the product's service life or incorrect operation.

In installations with high pressure or significant pressure fluctuations, it is recommended to install a suitable pressure reducer to protect the product and the other components of the installation.

Set the hot water temperature correctly to avoid the risk of scalding. Please note that certain parts of the product may become hot during use, particularly when hot water is circulating.

Do not leave the product running unattended where there is a risk of overflow, damage to property or unnecessary wastage of water.

Genebre S.A. Edificio Genebre. Avda. Joan Carles I, 46-48. 08908 L'Hospitalet de Llobregat.
Barcelona (Spain). Tel.: +34 93 298 80 00/01. e-mail: genebre@genebre.es. www.genebre.es

SAFETY WARNINGS

Maintenance and repairs

Regularly check the condition of connections, seals, fastenings and accessible components for any leaks, play, wear or signs of deterioration.

When cleaning, do not use harsh chemicals, abrasives, acids, solvents or scouring pads that could damage the surface or the internal components of the product.

Maintenance must be carried out in accordance with the instructions provided by **GENEBRE S.A.** and, where appropriate, by qualified personnel.

In the event of repair or replacement of components, use only original spare parts or those recommended by **GENEBRE S.A.** The use of unsuitable parts may affect the safety, watertightness and correct operation of the product.

General safety

The product may contain small parts, particularly during installation, maintenance or dismantling. Keep these components out of the reach of young children to avoid the risk of ingestion or suffocation.

Do not handle or modify the product in any way other than that specified by **GENEBRE S.A.** Any unauthorised modification may compromise the safety, operation and warranty of the product.

Do not use the product if it shows visible damage, leaks, deformation, breakage or any signs of abnormal operation. In such cases, stop using it and check the installation before putting it back into service.

Packaging and end of service life

After installation, dispose of the packaging in the appropriate containers, in accordance with local waste management regulations.

At the end of the product's service life, recycle or dispose of it in accordance with applicable local regulations for metal, plastic and other materials that may form part of the product.

Genebre S.A. Edificio Genebre. Avda. Joan Carles I, 46-48. 08908 L'Hospitalet de Llobregat.
Barcelona (Spain). Tel.: +34 93 298 80 00/01. e-mail: genebre@genebre.es. www.genebre.es